A-382 Транспортировочная тележка в сборе для K-3800

Цена с НДС	31 171р.
Артикул	55017

K-3800 Drain Cleaning Machine RIDGID

Transport Cart Components

NOTE: Order parts by Catalog Number only.
DO NOT order by Reference Number.
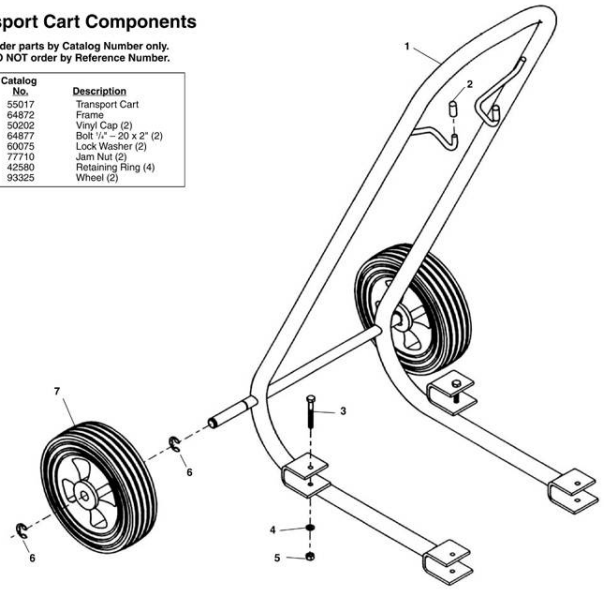
Ref. No.	Catalog No.	Description
—	55017	Transport Cart
1	64872	Frame
2	50202	Vinyl Cap (2)
3	64877	Bolt ½" – 20 x 2" (2)
4	60075	Lock Washer (2)
5	77710	Jam Nut (2)
6	42580	Retaining Ring (4)
7	93325	Wheel (2)